Product NO.	RHT-618-0725			
ISSUE	DESCRIPTION	DWN	DATE	APPROVEN
R1.0	First issue	Gavin	2020/02/22	JIM.KING

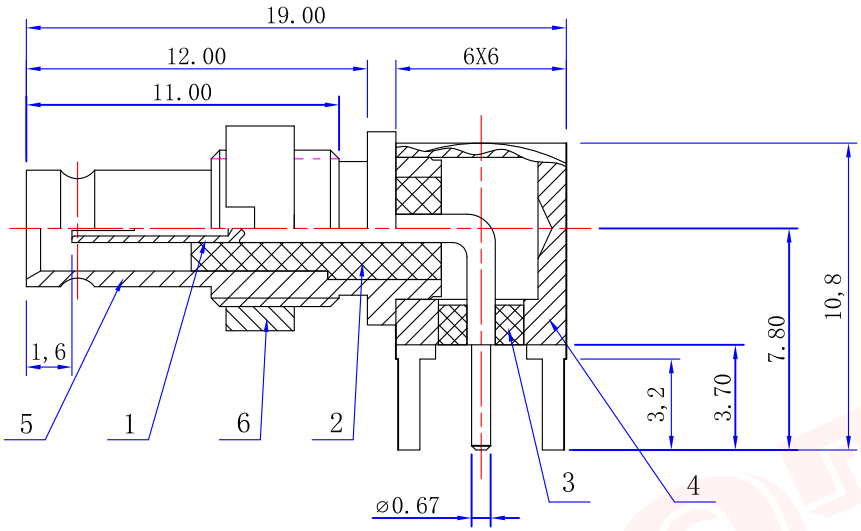

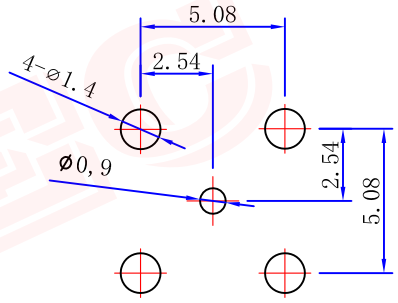

PCB LAYOUT

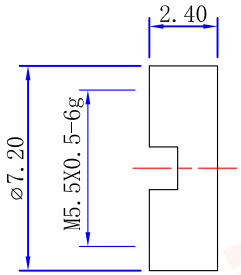

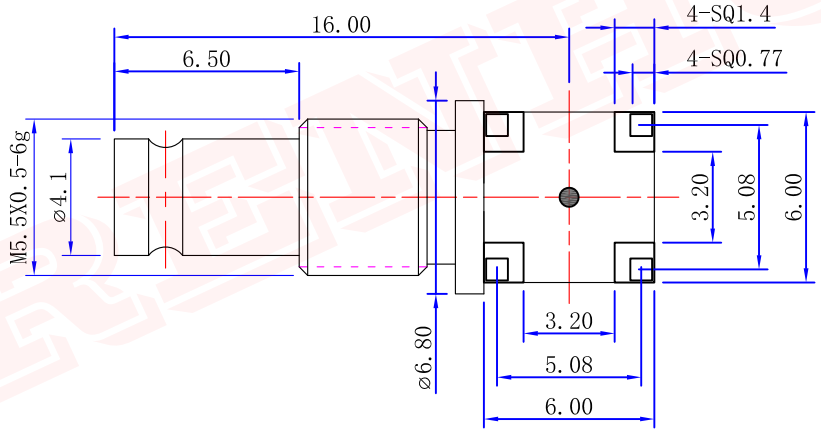

Specifications:

IMPEDANCE: 75 Ohms
Frequency range:0~3GHZ
VSWR:1.3MAX
Working voltage:500V rms @ sea level
Insulation resistance:5000 Ohms min
Temperature range:-40℃ TO +125℃
Relative temperature:≤95%(40° C±2° C)

NO	DESCRIPTION	MATERIAL	FINISH	QTY
6	NUT	BRASS	NICKEL	1
5	SHELL	BRASS	GOLD	1
4	SHELL	BRASS	GOLD	1
3	INSULATOR	POM	WHITE	1
2	INSULATOR	POM	WHITE	1
1	PIN	BRASS	GOLD	1

-TOLERANCES-
UNLESS OTHERWISE SPECIFIED

UNLESS OTHERWISE SPECIFIED
TOLERANCES FOR MILLIMETERS ARE:
0.5 - 8mm ± 0.10mm
8 - 30mm ± 0.15mm
30 -120mm ± 0.20mm

RENHOTEC www.renhotec.com RENHOTEC GROUP

PART DESCRIPION: 1.0-2.3 Jack PCB Mount

Appr: JIM.KING	P/N: RHT-618-0725				
Check:	Date	Scale	Unit	Type	Page
Draw: Gavin	2020.02.22	Free	MM	Z	1/1