Product NO.	DOSIN-809-0076			
REV	DESCRIPTION	DWN	DATE	APPROVEN
A	First issue	Mr.CHEN	2017/07/12	John kine
B				

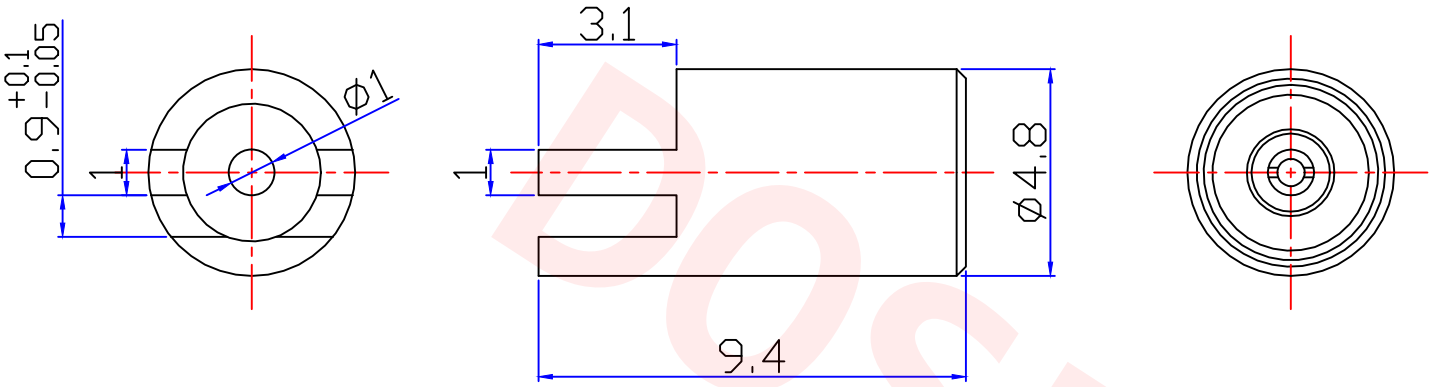

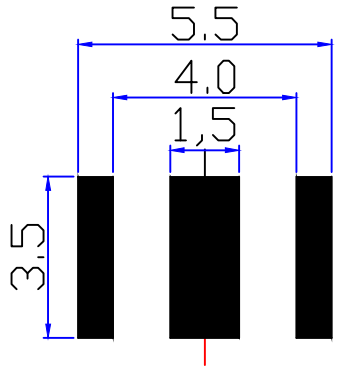

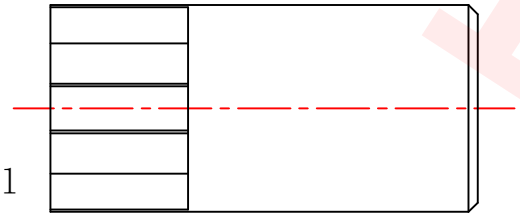

Specifications

Impedance: 50 Ohms
Frequency Range:0~6Ghz
VSWR:1.25max
Working Voltage:<170 V rms @ sea level
Insulation Resistance:5000 Ohms min
Temperature Range:-65℃ TO +165℃
Drawings products are in line with ROHS standards

PCB

DOSIN

NO	Component Number	Material	Finish	QTY
1	Body	Brass	NICKEL	1
2	Insulation	Teflon	White	1
3	Pin	Brass	GOLD	1
4				
5				
6				
7				
8				
9				
10				

NOTE:

DRAWN Zelin.chen
CHECKED
APPROVALS John

Tolerance		
	X.	±0.10
	X.X	±0.08
	X.XX	±0.05
	Angular	±5°
View		
UNIT	MM	
SCALE	1:1	

DOSIN —RF CONNECTOR Dosin Industrial(H.K)Co.Ltd
东莞市德索五金电子制品有限公司
Dosin Hardware Electronics Co.,Ltd
E-mail:dosin2005@163.com
dosin2005@dosin-china.com
Web:http://www.china-guan.com
TEL:(0086)769-81153906
FAX:(0086)769-81875836

Name: MCX JACK PCB

SIZE	Product NO.	REV
A	DOSIN-809-0076	B

DateTime	CAD FILE	SHEET: 1 OF 1
2017/07/12	D/company drawings/BD	