Product NO.	DOSIN-806-0024			
REV	DESCRIPTION	DWN	DATE	APPROVEN
A	First issue	Mr.chen	2016/04/16	John kine
B				

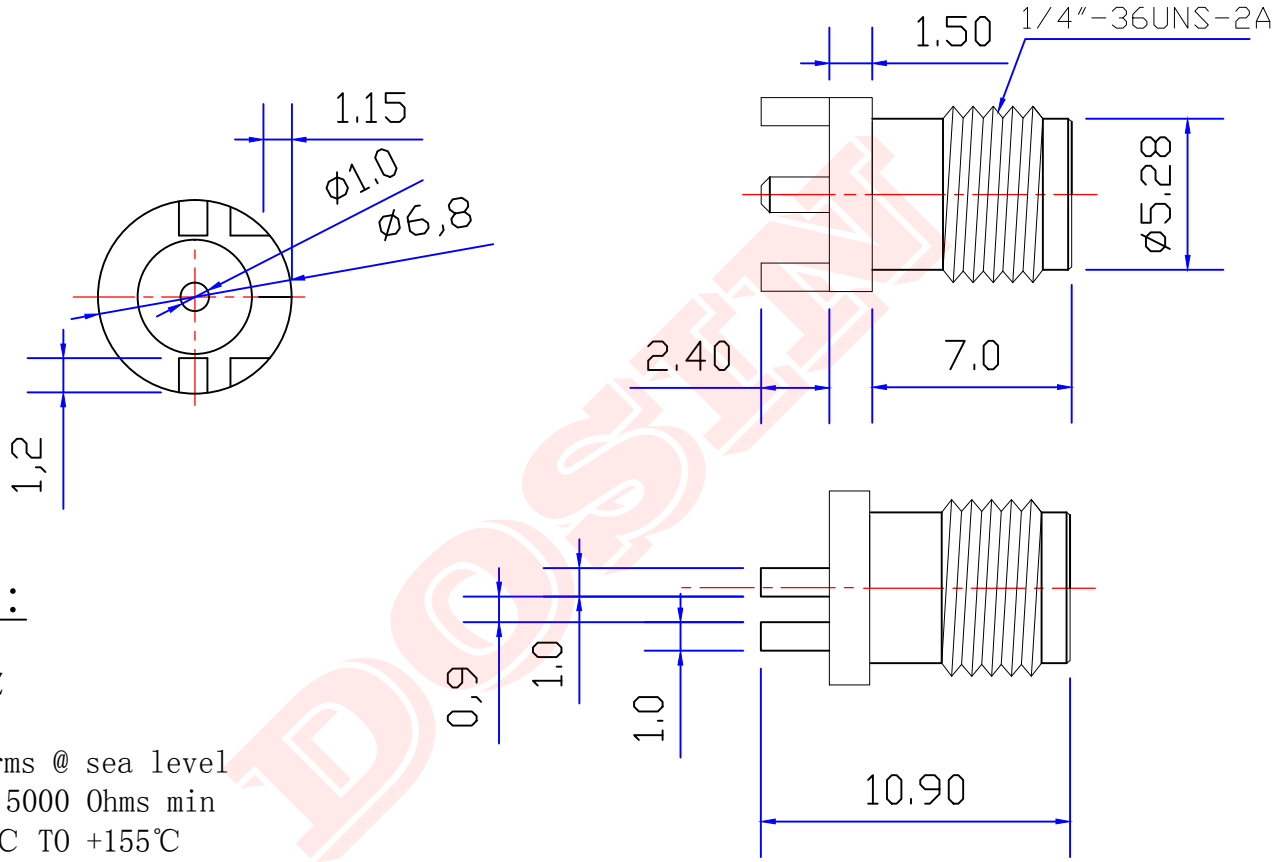

Specifications:

IMPEDANCE: 50 Ohms
Frequency range:0~6GHZ
VSWR:1.5MAX
Working voltage:500V rms @ sea level
Insulation resistance:5000 Ohms min
Temperature range:-55℃ TO +155℃
Relative temperature:≤95%(40° C±2° C)

NO	Component Number	Material	Finish
1	Body	Brass	Au:1u″
2	Insulator	TEFLON	White
3	Center contact	Phosphor	Au:3u″
4			
5			
6			
7			
8			
9			
10			

NOTE:

DRAWN	Zelin.Zhang	2016/04/16
CHECKED		
APPROVALS	John Kine	16/04.2016

Tolerance	X.	±0.15
	X.X	±0.10
	X.XX	±0.05
	Angular	±5°
View		
UNIT	MM	
SCALE	1:1	

DOSIN RF CONNECTOR Dosin Industrial (H.K) Co. Ltd
东莞市德索五金电子制品有限公司
Dosin Hardware Electronics Co., Ltd
E-mail:dosin2005@163.com
dosin2005@dosin-china.com
Web:http://www.dosinconn.com
TEL:(0086)769-81153906
FAX:(0086)769-81875836

Name:	SMA Right angle Jack PCB Mount		
SIZE A	Product NO. DOSIN-806-0024		REV A
DateTime 2016/04/16	CAD FILE H/company drawings/BD		SHEET: 1 OF 1