Product NO.	DOSIN-803-0012			
REV	DESCRIPTION	DWN	DATE	APPROVEN
A	First issue	Mr.chen	2016/05/06	John kine
B				

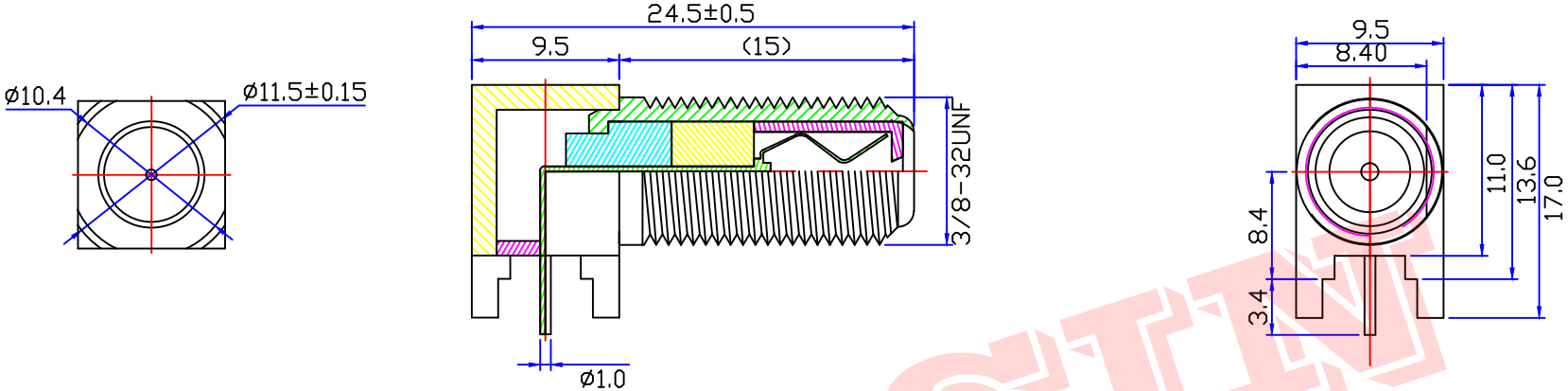

SPECIFICATIONS:

Impedance: 75 Ohms
Frequency Range:DC~3G
VSWR:30DdB Return loss @ 1GHZ
Working Voltage:15 watts continuous
Insulation Resistance:5000 Ohms min
Temperature Range:-40℃ TO +60℃
Drawings products are in line with ROHS standards

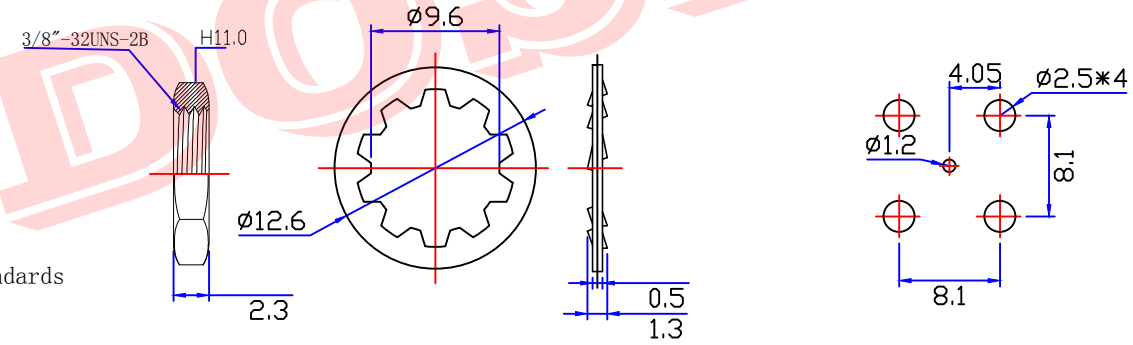

NO	Component Number	Material	Finish
1	Body	Brass	NI:80-120u"
2	Insulator	POM	WHITE
3	Center contact	Brass	SN:80-120u"
4	washer	Brass	NI:80-120u"
5	nut	Brass	NI:80-120u"
6			
7			
8			
9			
10			

NOTE:

DRAWN	Zelin.chen	2016/05/06
CHECKED		
APPROVALS	John	06/05.2016

Tolerance	X.	±0.15
	X.X	±0.10
	X.XX	±0.05
	Angular	±5°
View		
UNIT	MM	
SCALE	1:1	

DOSIN —RF CONNECTOR
Dosin Industrial(H.K)Co.Ltd
东莞市德索五金电子有限公司
Dosin Hardware Electronics Co.,Ltd
E-mail:dosin2005@163.com
dosin2005@dosin-china.com
Web:http://www.dosinconn.com
TEL:(0086)769-81153906
FAX:(0086)769-81875836

Name: F R/A Jack FOR PCB

SIZE	Product NO.	REV
A	DOSIN-803-0012	a

DateTime	CAD FILE	SHEET: 1 OF 1
2016/05/06	D/company drawings/BD	

DOSIN